KOMPTECH
INDUSTRIAL

EQUALIZOR

Shredder for all types of waste

available starting 2025

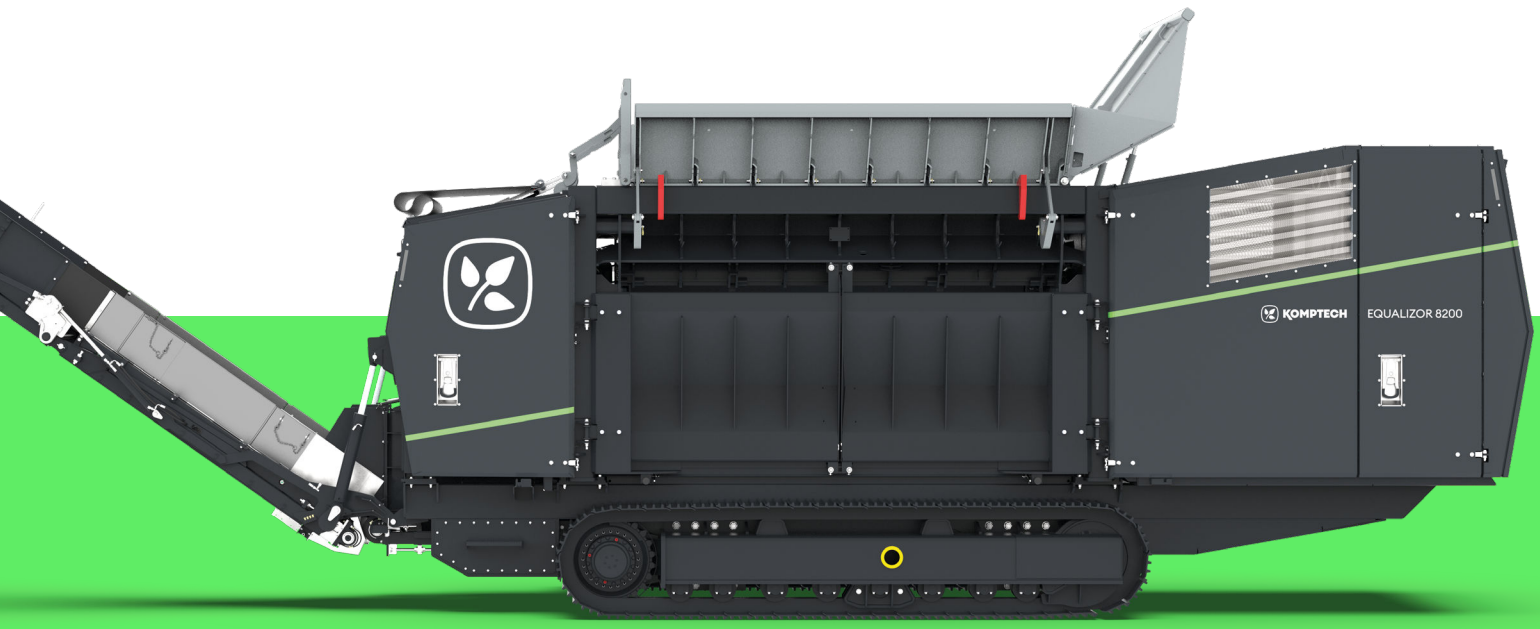





OVERVIEW

Medium-speed single-shaft shredder for all types of waste

With the Equalizor, Komptech is launching a new technology. This new single-shaft shredder is designed for processing commercial, bulky, and household waste for recycling and thermal reclamation. With its Terminator and Crambo genes, the Equalizor is perfect for the job. The high-efficiency direct drive by electric motors on both sides of the drum, a speed range of 50-100 rpm, and precision setting of the cutting gap between drum and counter-cutter all work together to turn out a homogenous product with high throughput. The screen baskets are quick and easy to change, using the same system as on the Crambo. The machine is currently offered as a medium shredder, and shredding units for coarse pre-shredding and precision post-shredding will follow.

The Equalizor is all-electric. If mobility is required there is a Track version which runs on powerful batteries. As usual with Komptech, all maintenance points are easily accessible and operation is intuitive.

- **Extremely robust construction and tough, durable components on both the stationary and mobile versions**
- **High-efficiency drive system with overload protection, variable drum speed, and reversing function**
- **Easy screen basket change with hydraulically extensible screen basket frame, basket change without tools**
- **Easy access to all maintenance points via integrated service platforms**

Drive power (kW)

2 x 132

↓

2 x 160

Throughput (t/h)*

up to

50

* ... preshredded commercial waste with a density of 0.4 t/m³

Gross weight (t)

up to

40

The machine in greater detail

Komptech stands for quality, reliability and value retention. This is assured by the use of high-quality components, certified production processes and gapless quality control.



Mobility

Track Stationary

Screen baskets

40 - 200 mm

Drum speed

95 rpm

Stepless adjustment

01



Drive system

- High-efficiency direct drive by electric motors on both sides of the drum
- Variable roller speed, reversing function, overload protection
- High-performance cooling system and seals to protect against overheating and dirt

02



Material feed

- Extremely large 2 x 3 m feed
- Hydraulic tilt hopper for easy loading (mobile version)
- Automatic pre-compressor for precise cut

03



Shredding unit

- Configured as medium shredder for 40-200 mm grain sizes
- Drum 3,050 mm long and 870 mm in diameter with 42 tooth positions (mid cut)
- Tough teeth on drum and counter-cutter, reusable several times

04

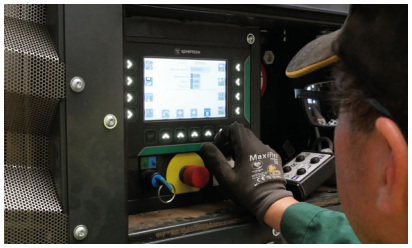

Operation

- Operating panel with high resolution 7” colour screen and intuitive menu guidance
- Wireless remote control including machine status display
- Onboard diagnostics, with trouble-shooting integrated into the control system for fast problem solving

05



Ease of use

- Easy screen basket change with hydraulically extending screen basket frame
- Generous discharge channel prevents material blockages
- Steplessly adjustable discharge conveyor inclination (mobile version)

06



Maintenance

- Large service panels for easy access to all maintenance points
- Maintenance-free electric motors
- Excellent protection for all components through massive motor compartment cladding and special switchgear cabinet



The Komptech plus

Top advice

We'll show you how to optimize your processes, based on our experience and extensive data analyses.

Service near you

Expert technicians are on-site quickly to make sure your machines keep running.

Spare parts always available

Intelligent stocking for the fast, economical provision of highquality spare parts.

All-in solutions

From individual mobile machines to complex stationary systems, with us you get the right process solution.

Productivity in view

Apps and integrated monitoring let you keep an eye on operating data and economy.

Need-based service

Our maintenance and service agreements, as well as extended warranties, are aligned with your needs.

Overview of our technology

Look here for the newest updates, specifications and more detailed descriptions:

Model	Mobile	Stationary
Engine		
Drive system	Electromechanical	Electromechanical
Power kW	2 x 132 - 2 x 160	2 x 132 - 2 x 160
Loading heights		
Fill height (mm)	3,594	System-specific
Discharge height (mm, 35°)	4,122	System-specific
Shredding unit		
Drum speed (rpm)	max. 95	max. 95
Drum length (mm)	3,050	3,050
Drum diameter (mm)	870	870
Dimensions in transport position/working position (conveyor belt 35°)		
Transport L x W x H (mm)	9,137 x 3,485 x 2,908	-
Working L x W x H (mm)	13,468 x 3,184 x 4,122	6,602 x 2,270 x 3,080 (without substructure)
Weight (t)	~40	~24
Throughput		
Throughput (t/h)	up to 50	up to 50

Equalizor

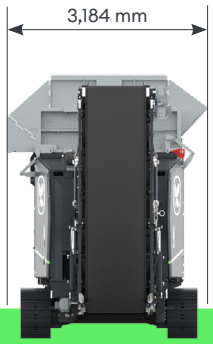

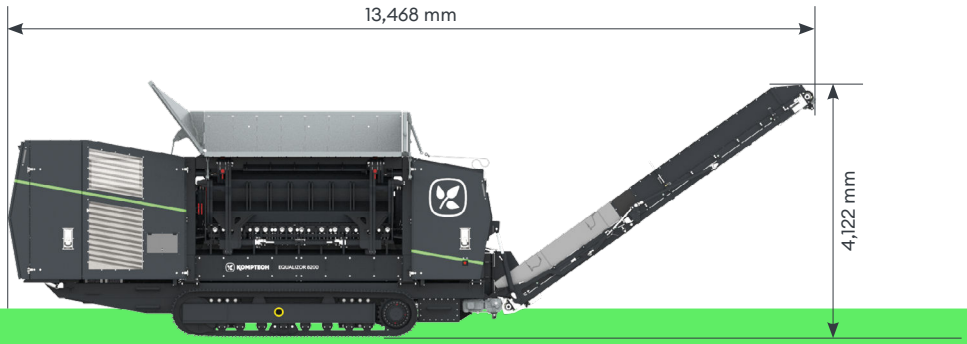

KOMPTECH

Never waste an opportunity.

Komptech GmbH
Kühau 37
8130 Frohnleiten, Austria
+43 3126 505 - 0
info@komptech.com

© Komptech GmbH | Q2 2024. No liability accepted for changes, errors and misprints. Printed on PEFC-certified paper, which was produced in Styria, Austria.

We create value for you

Waste-stream expertise

Because you need a setup that is tailored to your waste stream.

Innovative technology

Because you need to adapt your output to your market needs.

Flexible sales models

Because you have the choice between new, rental and used machines.

Service excellence

Because you always need to keep your system running.